California Polytechnic State University Pomona
DEPARTMENT OF ELECTRICAL & COMPUTER ENGINEERING

Intro to Microelectronics Laboratory

ECE 2200L
Report #6

LAB 6 – BJT Biasing and Q-Point Stability

Prepared by
Elias Cortes & Kevyn Santos

Presented to
Aspet Gharakhanian

March 13, 2025

Introduction:

Our objective during this lab is to study and experiment on three different DC biasing circuits for two different BJTs. We will compare the stability of the bias point in these circuits. Lastly, we will observe an amplifier circuit and analyze the waveforms it produces.

Parts List:

1. Resistors: 510 [Ω], 820 [Ω], 1.2 [kΩ], 1.5 [kΩ], 3.3 [kΩ], 15 [kΩ], 120 [kΩ], 390 [kΩ]
2. Transistors: 2N2222, 2N3904
3. Capacitors: 10 [μF], 220 [μF]

Pre-Lab:

	V_B	V_E	V_C	$V_{CE} = (V_C - V_E)$	$I_C = \frac{(V_S - V_C)}{R_C}$	$I_B = \frac{(V_B)}{R_B}$	$\beta = \frac{I_C}{I_B}$
Q1: 2N3904	0.663 V	0 V	5.96 V	5.96 V	2.7 mA	1.7 μA	1584
Q2: 2N2222	0.654 V	0 V	5.694 V	5.694 V	2.9 mA	1.68 μA	1711

TABLE 1. Displays data gathered during simulated part 1.

	V_B	V_E	V_C	$V_{CE} = (V_C - V_E)$	$I_C = \frac{(V_S - V_C)}{R_C}$	$I_B = \frac{(V_B - V_{BE})}{R_B}$	$\beta = \frac{I_C}{I_B}$
2N3904	3.57 V	2.88 V	7.15 V	4.27 V	5.6 mA	24 μA	233
2N2222	3.92 V	3.24 V	6.79 V	3.55 V	6.3 mA	27 μA	233

TABLE 2. Displays data gathered during simulated part 2.

	V_B	V_E	V_C	$V_{CE} = (V_C - V_E)$	$I_C = \frac{(V_S - V_C)}{R_C}$	$I_B = \frac{(V_B - V_{BE})}{R_B}$	$\beta = \frac{I_C}{I_B}$
2N3904	1.77 V	1.13 V	8.34 V	7.21 V	1.38 mA	418 μA	3.3
2N2222	1.77 V	1.14 V	8.35 V	7.21 V	1.38 mA	421 μA	3.28

TABLE 3. Displays data gathered during simulated part 3.

% Change	V_B	V_E	V_C	V_{CE}	I_C	I_B	β
Part 1	1.36%	0%	4.46%	4.47%	7.41%	1.18%	8%
Part 2	9.8%	12.5%	5.03%	16.86%	12.5%	12.5%	0%
Part 3	0%	0.89%	0.12%	0%	0%	0.72%	0.61%

TABLE 4. Displays data showing the percent change of the two transistors for our simulated experiments.

Circuit Schematics:

Part 1:

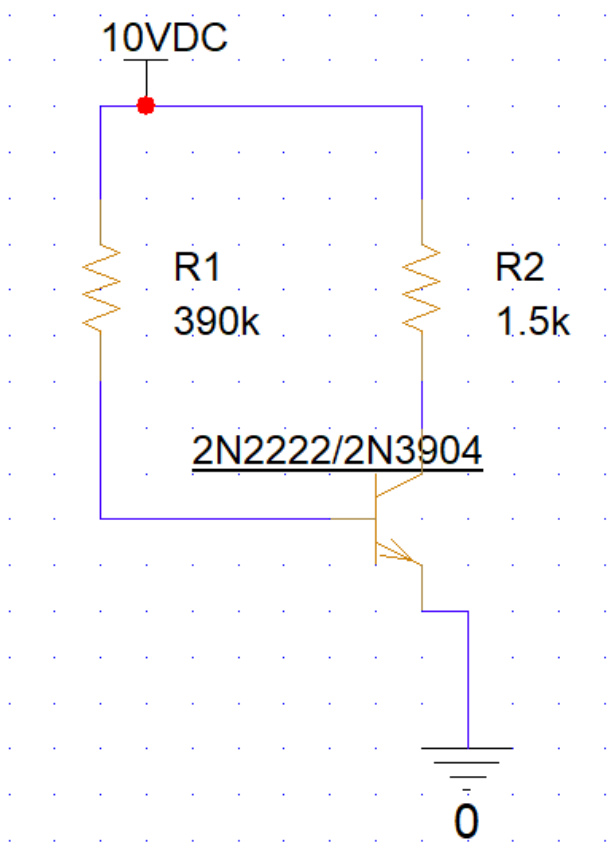

Fig. 1. Depicts circuit from Part 1 of the lab.

Part 2:

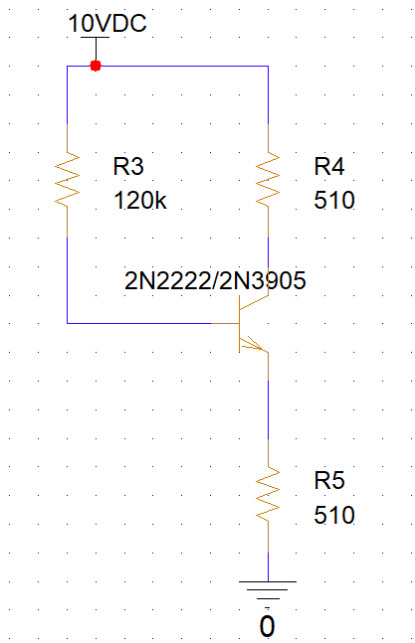

Fig. 2. Depicts circuit from Part 2 of the lab.

Part 3:

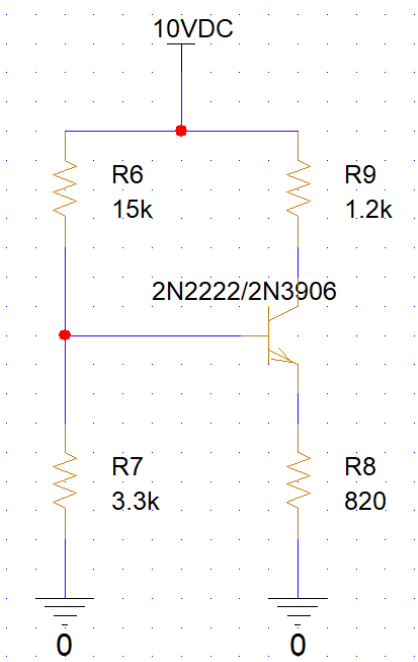

Fig. 3. Depicts circuit from Part 3 of the lab.

Part 4:

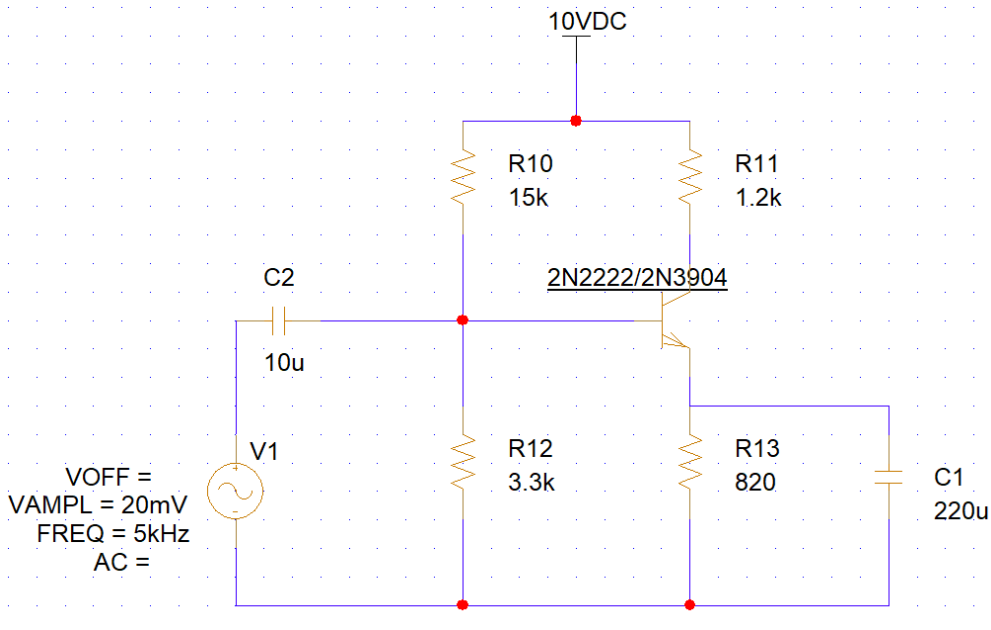

Fig. 4. Depicts circuit from Part 4 of the lab.

<u>Experimental Data:</u>

Part 1:

	V_B	V_E	V_C	$V_{CE} = (V_C - V_E)$	$I_C = \frac{(V_S - V_C)}{R_C}$	$I_B = \frac{(V_B)}{R_B}$	$\beta = \frac{I_C}{I_B}$
2N3904	0.710 V	0.75 mV	4.293 V	4.29225 V	3.8 mA	1.82 µA	2088
2N2222	0.664 V	1.26 mV	0.714 V	0.71274 V	6.2 mA	1.7 µA	3647

TABLE 5. Displays data gathered during part 1.

Part 2:

	V_B	V_E	V_C	$V_{CE} = (V_C - V_E)$	$I_C = \frac{(V_S - V_C)}{R_C}$	$I_B = \frac{(V_B - V_{BE})}{R_B}$	$\beta = \frac{I_C}{I_B}$
2N3904	4.547 V	3.843 V	6.215 V	2.372 V	7.42 mA	32.07 µA	231.44
2N2222	4.917 V	5.553 V	5.133 V	-0.42 V	9.54 mA	46.28 µA	206.23

TABLE 6. Displays data gathered during part 2.

Part 3:

	V_B	V_E	V_C	$V_{CE} = (V_C - V_E)$	$I_C = \frac{(V_S - V_C)}{R_C}$	$I_B = \frac{(V_B - V_{BE})}{R_B}$	$\beta = \frac{I_C}{I_B}$
2N3904	1.777 V	1.094 V	8.377 V	7.283 V	1.35 mA	404.5 µA	3.34
2N2222	1.784 V	1.165 V	8.263 V	7.098 V	1.45 mA	430.7 µA	3.361

TABLE 7. Displays data gathered during part 3.

Part 4:

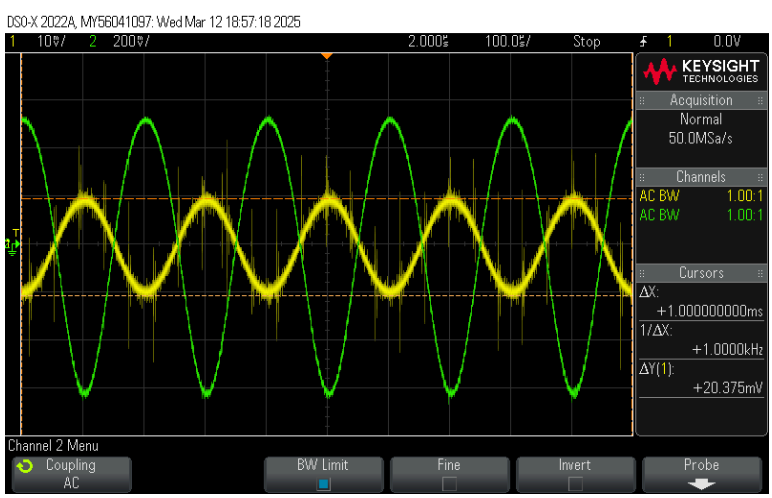

Fig. 5. Scope capture from Part 4 with Vin measurement (peak-to-peak).

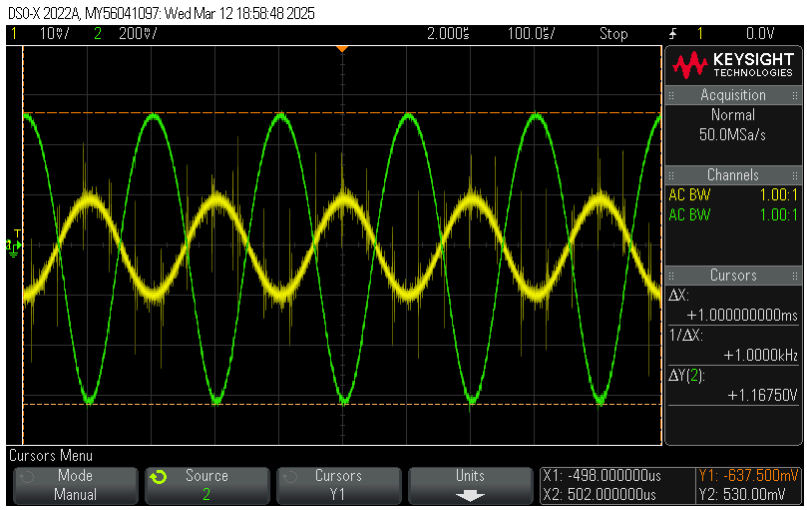

Fig. 6. Scope capture from Part 4 with V_C measurement (peak-to-peak).

Post-Lab:

% Change	V_B	V_E	V_C	V_{CE}	I_C	I_B	β
Part 1	6.48%	68%	83.5%	83.5%	63.16%	6.59%	74.8%
Part 2	8.13%	44.5%	17.4%	117.7%	28.6%	44.3%	10.9%
Part 3	0.39%	6.5%	1.36%	2.54%	7.41%	6.47%	0.63%

TABLE 8. Displays data showing the percent change of the two transistors for our experimental data.

	V_B	V_E	V_C	I_C	I_B	β
Part 1	1.4 [V]	0 [V]	1.9 [V]	5.4 [mA]	20 [μA]	270
Part 2	6 [V]	2.7 [V]	7.3 [V]	5.4 [mA]	20 [μA]	270
Part 3	2.905 [V]	1.08 [V]	5.572 [V]	5.4 [mA]	20 [μA]	270

TABLE 9. Displays post-lab data showing calculated V_B, V_E, and V_C values based on beta value from previous lab.

Part 4:

Measured Gain: $A_V = \frac{V_o}{V_z} = 58.375$

Theoretical Gain: $A_V = -g_m \cdot R_C = 69.48$

Percent Difference: 15.98%

Conclusion:

In this lab, we used a 2n2222 and a 2n3904 transistor. In the beginning, we found that there were very large differences between all the voltage and current values between the two transistors. Conceptually speaking, this is what we expected based on our pre-lab results; although, we did not expect the differences to be as high as they were. As far as implementing the circuit during lab went, there were no discernible errors. The main potential cause of the large differences is the fact that the voltage values were varying as we were measuring them, even though there were no AC voltage sources connected to the circuit. Thus, it seems that due to the nature of the circuit itself there were large differences. During the second part of the lab, there were still significant differences between all our values, but our beta values were much similar. Looking back at the pre-lab results, it was expected that our beta values would be the same and that our voltage and current values would be notably different from one another. Once again, the circuit in part 2 was virtually the same as the circuit in part 1; however, we placed a resistor at the emitter of the BJT. For the final part of the lab, we expected the differences between every value to be very small (on average less than 1%). The corresponding experimental results are the most similar results that we received over the course of this lab. The circuit from part 3 is inherently configured to be much more stable than the previous circuits, which would explain why our values were much more consistent with another. Furthermore, 2n2222 and 2n3904 theoretically should have the same beta values. Finally, after constructing the amplifier circuit we measured a gain of 58.375. This gain was about 15.98% different than what we expected. In any case, we saw that the output voltage was amplified significantly by the BJT. This demonstrated to us that transistors are excellent voltage amplifiers.